NUMERICAL ANALYSIS OF HRSG INLET DUCT FOR UNIFORM GAS FLOW DISTRIBUTION

E.Jesulin Immanuel*, Azhagiri Pon
University College of Engg, BIT campus, Tiruchirappalli-24
***Corresponding author: Email: jesulinimman@gmail.com**

ABSTRACT

Combined cycle power plant is widely used throughout the world for its most efficient power generation. A CCPP consists of a fuel-fired gas turbine and a Heat Recovery Steam Generator (HRSG) with a steam turbine. The Heat recovery steam generator is used to recover the heat energy in Gas turbine (GT) Exhaust and generates steam for power generation. The inlet side of HRSG is connected with Gas turbine by an interconnecting duct which is called transition zone. An important design consideration for HRSG is the uniform flow distribution of the exhaust gases throughout the heat exchanger tubes. The tubes are more susceptible to rupture and overheating when the flow distribution is strongly non uniform. The main objective of the project is to get the uniform gas flow distribution at the inlet of HRSG heat transfer bundles. The inlet duct configuration is to be designed optimally for obtaining uniform gas flow distribution at HRSG inlet. Numerical simulation by commercial Computational fluid dynamics (CFD) code is performed for various inlet duct configuration with flow correction device for better uniformity. Finally based on the results obtained from the analysis, the better inlet duct configuration is obtained for uniform gas flow distribution at HRSG inlet.

Keywords: Heat Recovery Steam Generator (HRSG), Gas turbine (GT),Steam turbine(STG), Computational fluid dynamics (CFD), Combined cycle power plant(CCPP)

INTRODUCTION

Nowadays electrical energy is the most important form of energy used by man and the importance of its generation is quite clear to everyone. For this reason, power stations must be analyzed as the most important energy systems. Among the different types of power plants, thermal power plants hold a greater share in power production and combined cycle power plants based on gas turbines, as various advantages such as their high efficiency, negligible emission of environment pollutants, high availability, short startup time, flexibility in production, etc. As a result, various efforts have been made throughout the world to achieve optimal design and to boost performance of these power plants. Combined cycle (CC) power plants become a good choice to produce energy, because of their high efficiency and the use of low carbon content fuels (e.g. natural gas) that reduces the greenhouse gases production. CC plants couple a Brayton cycle with a Rankine cycle. The hot exhaust of the gas turbine (Brayton cycle) delivers energy to produce high-pressure steam for the Rankine cycle. The equipment where the steam production takes place is named the heat recovery steam generator (HRSG).

High efficiency in CC can be achieved for two main reasons:

1. Improvements in the gas turbine technology (i.e. higher inlet temperature).

2. Improvement in the HRSG design.

Flow distribution is an important issue at HRSG inlet. The heat transfer bundles are more susceptible to rupture and overheating when the flow distribution is strongly non uniform. It has significant influence on the performance of HRSG. Flow misdistribution lowers the process efficiency because some portion of the equipment becomes ineffective by introducing recirculation or concentration profiles.

Hyuntae shin et al., conducted numerical and experimental studies to understand the flow patterns in the vertical type HRSG. Design alternatives to reduce the non-uniformity of the flow, such as the change of inlet duct shape, introduction of flow correction devices such as a guide vane and a perforated plate are evaluated. The results shows that a perforated plate showed the best performance for the uniformity improvement (C.Bhasker, 2011) has investigated Flow simulation in inlet ducts along with several turning vanes used in electrostatic precipitator (ESP) to understand the flow pattern at its exit locations. The results shows that optimization of flow by addition of more number of turning/splitter vanes (M.Pinelli, 2009) analyzed different stack design solutions in a cogeneration power plant by using a multidisciplinary analysis.

Approach: It is extremely difficult to measure the flow characteristics in real scale plants, and thus model tests are often preferred instead. Model tests show advantages of being able to easily change specific parameters which affect the system. Since the numerical modeling has been always more flexible and with less costly than the

experimental approach, therefore it is preferred for CFD study in HRSG to obtain uniform gas flow distribution at HRSG inlet.

Simulation setup and data input: Computational fluid dynamics (CFD) simulation was carried out to examine the flow patterns in the transition zone of HRSG. Full scale at 100% GT load operating condition was considered for the simulation. To model the inflow into the transition zone more exactly, the computational domain was extended from the tail end of the gas turbine to the exit of the HRSG unit. The stack of HRSG and bypass stack were excluded from the domain because they were not expected to have effect on the flow. Inlet conditions of the exhaust gas were summarized in Table 1.

The Numerical analysis of different HRSG Inlet duct configuration have been carried out for achieving uniform gas flow distribution at HRSG inlet. There are three cases taken to study. In case1, the HRSG straight inlet duct is numerically examined. In case 2, HRSG unit with composite angle inlet duct is examined. In case 3, to investigate the effect of a flow correction device (FCD) on the gas flow pattern, a perforated plate with 50% open area is placed at the inlet duct. The different HRSG Inlet duct geometry taken for Numerical analysis for case 1, case 2 and case 3 are shown as Figure 1, Figure 2 and Figure 3 respectively.

Table.1. Inlet conditions of the exhaust gas

Sl.No	Description	Unit	Value
1	GT Exhaust flow	t/h	487
2	GT Exhaust temperature	°C	563.4
3	GT Exhaust composition		
	N2	%Vol	71.07
	CO2	%Vol	3.46
	O2	%Vol	12.94
	H2O	%Vol	11.69
	Ar	%Vol	0.85
4	Flue gas density	kg/m3	0.4079
5	Hydraulic diameter	m	3.08

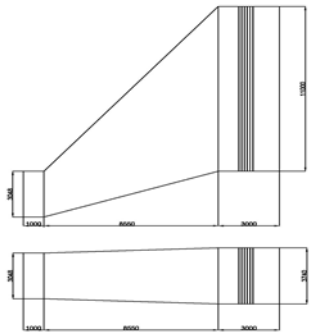

Figure.1.HRSG conventional straight inlet duct

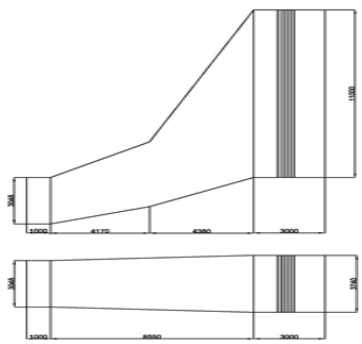

Figure.2.HRSG composite angle inlet duct

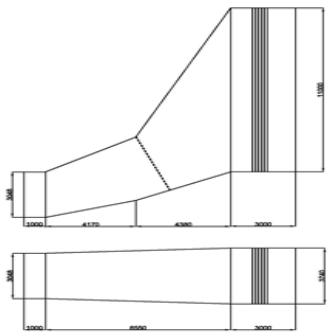

Figure.3.Composite angle inlet duct with perforated plate

CFD Simulation: Commercial CFD software package, Fluent 14.5 was used for the numerical simulation with the k-ε model adopted for turbulence. The total volume divided into about 6.5 Lakhs elements and the grid pattern was selected in such a manner that the grid spacing near the entrance of the tube zone was sufficiently fine. To simulate the tube zone, the model is created with actual tube dimensions.

Analysis software: The computational flow analysis was completed using the CFD analysis package Fluent 14.5, provided by Fluent Inc. Fluent is an internationally known and recognized software package for flow, heat transfer and combustion modelling and is widely used throughout the power industry. Fluent is currently the largest provider of commercial computational fluid dynamics (CFD) software worldwide.

Modelling Methodology: The process for analyzing the gas flow through the HRSG begins with the construction of a three dimensional representation of the geometry and its interior gas volume. The gas volume of the geometry is then sub divided into a computation mesh consisting of small volumes. The computational elements are sized to capture significant gradients in gas velocity, so that accurate predictions of the flow behavior are reproduced. Once the mesh is complete, boundary conditions appropriate for the operating conditions are specified on all of the mesh

surfaces. Once the boundary conditions are set, the iterative solution process for the computational model can then be started.

Model Geometry: The model Geometry includes the HRSG inlet duct and first box of heat transfer bundles. The remainder of the HRSG was not modeling since the modules downstream of bundle has received satisfactory distribution. The Geometry of the inlet duct of HRSG is modeled in GAMBIT software.

Meshing: The most important part in CFD simulation is discretization of geometry. The computational mesh was generated using 3-D tet/Hybrid type to provided best representation of the HRSG geometry and the best mesh resolution while maintain reasonable overall model size for time efficient simulation. Appropriate mesh resolution was used throughout the model to resolve relevant flow. The model geometry and meshing for case 1, case 2 and case 3 are shown as Figure no 4, 5 and 6 respectively.

Boundary conditions considered and applied at the inlet to the HRSG. The Boundary conditions used are flue gas, mass flow rate and density. It is assumed that all particles have attended their terminal velocity and have entered perpendicular to the duct.

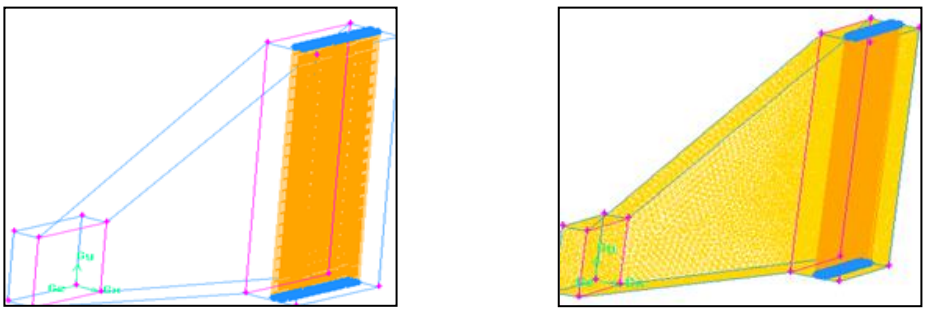

Figure.4.HRSG conventional straight inlet duct Geometry and meshing

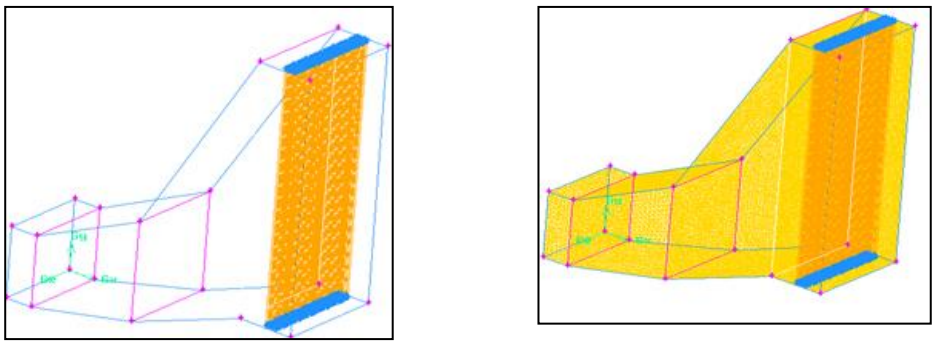

Figure.5.HRSG composite angle inlet duct Geometry and meshing

Boundary condition:

K-Є Turbulence model: One of the most prominent turbulence models, the k-ε (k-epsilon) model, has been implemented in most general purpose CFD codes. It has proven to be stable and numerically robust and has a well-established regime of predictive capability. For general-purpose simulations, the k-ε model offers a good compromise in terms of accuracy and robustness. The K-Є model is adopted for Numerical simulation.

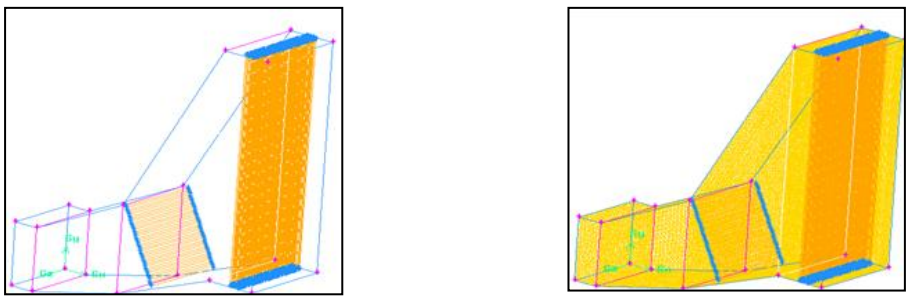

Figure 6 HRSG composite angle inlet duct with perforated plate Geometry and meshing

RESULTS AND DISCUSSION

Case (1) - Conventional Straight inlet duct: The 3-dimensional CFD simulation was conducted to investigate the effect of conventional straight inlet duct shape on flow uniformity. Flow introduced into the duct is decelerated with the increase of the duct cross-section area. The sudden expansion of cross-sectional area would create non-uniformity of the flow at the tube bank inlet. It results shows that due to the higher velocity and turbulence, the part of flue gas flow is recirculated at the upper part of inlet transition duct. Figure 7 shows the recirculation in the velocity vector. Figure 8 shows the contour of velocity magnitude of HRSG inlet duct. Due to large flow recirculation and turbulent losses in the duct, non-uniform averaged mass flow rates are noticed at duct exit locations. Simulation results suggest that the improvement of flow distribution in the duct through optimization can be tried by modifying the inlet duct Geometry.

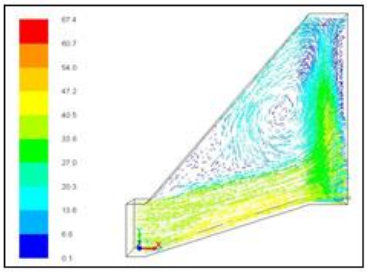

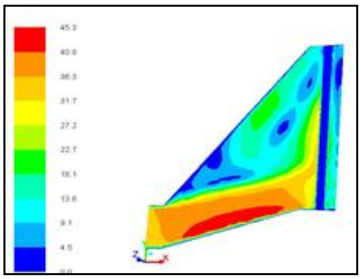

Figure.7.Velocity Vector magnitude, m/s **Figure.8.Contour of Velocity magnitude, m/s**

Case (2) - Composite angle inlet duct: The 3-dimensional CFD simulation was conducted to investigate the effect of composite angle transition duct shape on flow uniformity. The shape of inlet duct has been changed compared to previous model. It is observed that the part of flue gas flow is recirculated at the second part of the composite angle inlet transition duct. Figure 9 shows the recirculation in the velocity vector. Figure 10 shows the contour of velocity magnitude of HRSG inlet duct. The flow distribution is slightly improved as compared to the conventional straight inlet duct. Due to small flow recirculation and turbulent losses in the duct, non-uniform averaged mass flow rates are noticed at duct exit locations. Simulation results suggest that the improvement of flow distribution in the duct through optimization can be tried by introduction of flow correction device.

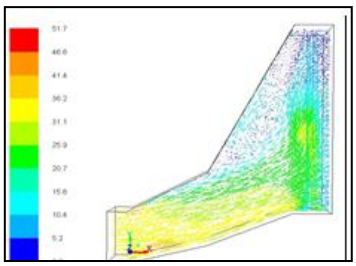

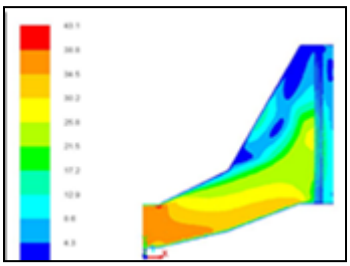

Figure.9.Velocity Vector magnitude, m/s **Figure.10.Contour of Velocity magnitude, m/s**

Case (3) - Composite angle inlet duct with perforated plate: The 3-dimensional CFD simulation was conducted to investigate the effect of composite angle transition duct with perforated plate on flow uniformity. To investigate the effect of a flow correction device (FCD) on the gas flow pattern, a perforated plate with 50% open area is placed at the inlet duct. In the previous study, it is identified that perforated plates were needed in the inlet duct to distribute the uniform flow in the duct, without any plate most of the flow is located at the lower part of the inlet duct. The results shows that there is no recirculation occurred in the composite angle inlet transition duct with perforated plate which can be seen in the velocity vector (figure 11). It is important in selecting the design of the flow perforated plate, which should not have a negative impact on the flow from the Gas turbine. To obtain maximum uniform flow, horizontal distribution plates are used for distributing and dividing the flow from the inlet duct.

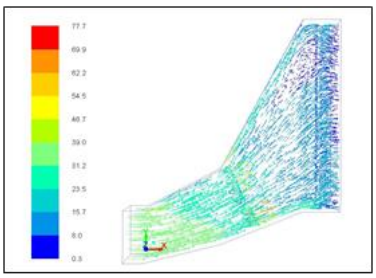

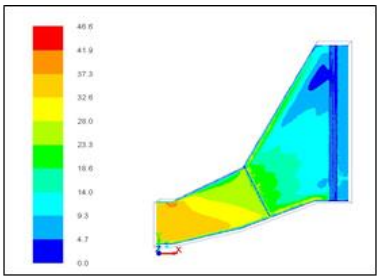

Figure.11.Velocity Vector magnitude, m/s **Figure.12.Contour of Velocity magnitude, m/s**

The average axial velocity and velocity distribution at HRSG inlet is collected for all three cases (Table-2).

Case	Description	Average axial velocity,m/s	Surface Area with in ±25% of average axial velocity
1	Conventional straight inlet duct	23.6	22
2	Composite angle inlet duct	17.3	29
3	Composite angle inlet duct with perforated plate	10.4	75

CONCLUSION

A computational procedure for investigating hydrodynamic behavior of a combustion gas flow exhausted from a GT and passing through a HRSG was detailed. Certain techniques including installing a perforated plate in the inlet duct and composite angle inlet duct were analysed to avoid the non-uniformity of the gas flow at the upstream of the HRSG heating surfaces, considered as unfavorable impact. The influence of such modifications on the gas flow field within the HRSG duct was numerically experimented. Among the ideas, a perforated plate showed the best performance for the uniformity improvement. The simulation indicated that 75% of cross sectional area has velocity ±25% of average axial velocity which is acceptable by many HRSG manufactures. CFD simulation results shown that the uniform gas flow distribution can be achieved by modifying the inlet duct geometry with suitable perforation plate.

REFERENCES

C.Bhasker, Flow simulation in Electro static Precipitator (ESP) ducts with turning vanes, Advances in Engineering Software, 42, 2011, 501-512.

C.Bhasker, Numerical simulation of turbulent flow in complex geometries used in Power plans, Advances in Engineering Software, 33, 2002, 71-83.

Hegde, N, Han, I, Lee, T. W, and Roy, R. P, Flow and heat transfer in heat recovery steam generators, Journal of Energy Resources Technology, 129, 2007, 232-242

Hyuntae Shin, Dae hee Kim, Hyungjun Ahn, sangmin Choi, Gichul Myoung, Thermal Stress Analysis in Structural Elements of HRSG casing, International Journal of Energy Engineering 2012, 2(5), 202-209.

Hyuntae shin, Daehee Kim, Sangmin Choi, Gichul Myoung, Investigation of the Flow pattern in a Complex Inlet Duct of a Heat Recovery Steam Generator, Journal for Energy and Power, 2(1), 2012, 1-8.

jinping Zhang, Angui Li, CFD Simulation of particle deposition in a horizontal duct flow, Chemical Engineering Research and Design, 86, 2008, 95-106.

Lee, B. E., Kwon, S. B., and Lee, C. S, On the effect of swirl flow of gas turbine exhaust gas in an inlet duct of heat recovery steam generator, Journal of Engineering for Gas Turbines and Power, 124(3), 2002, 496-502

M.Pinelli, G.Bucci, Numerical based design of exhaust gas system in a cogeneration power plant, Applied Energy 86, 2009, 857-866.